WAFER DUAL CHECK CV VALUE														
SIZE	2"	2.5"	3"	4"	5"	6"	8"	10"	12"	14"	16"	18"	20"	24"
CV VALUE	54.3	82.1	139.3	271.3	482.5	725	1059	2640	4075	5303	7340	9940	12960	20500

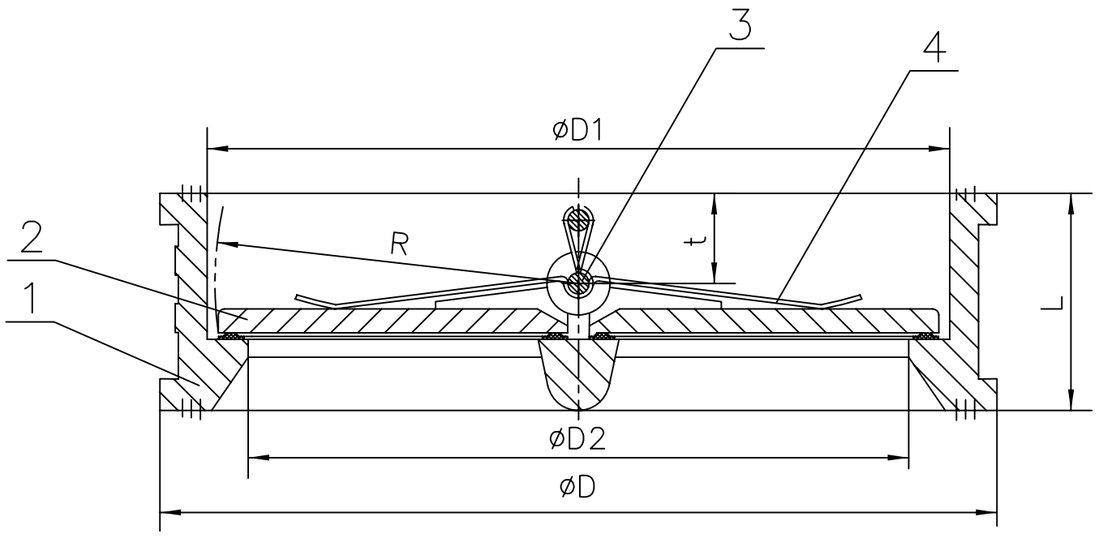

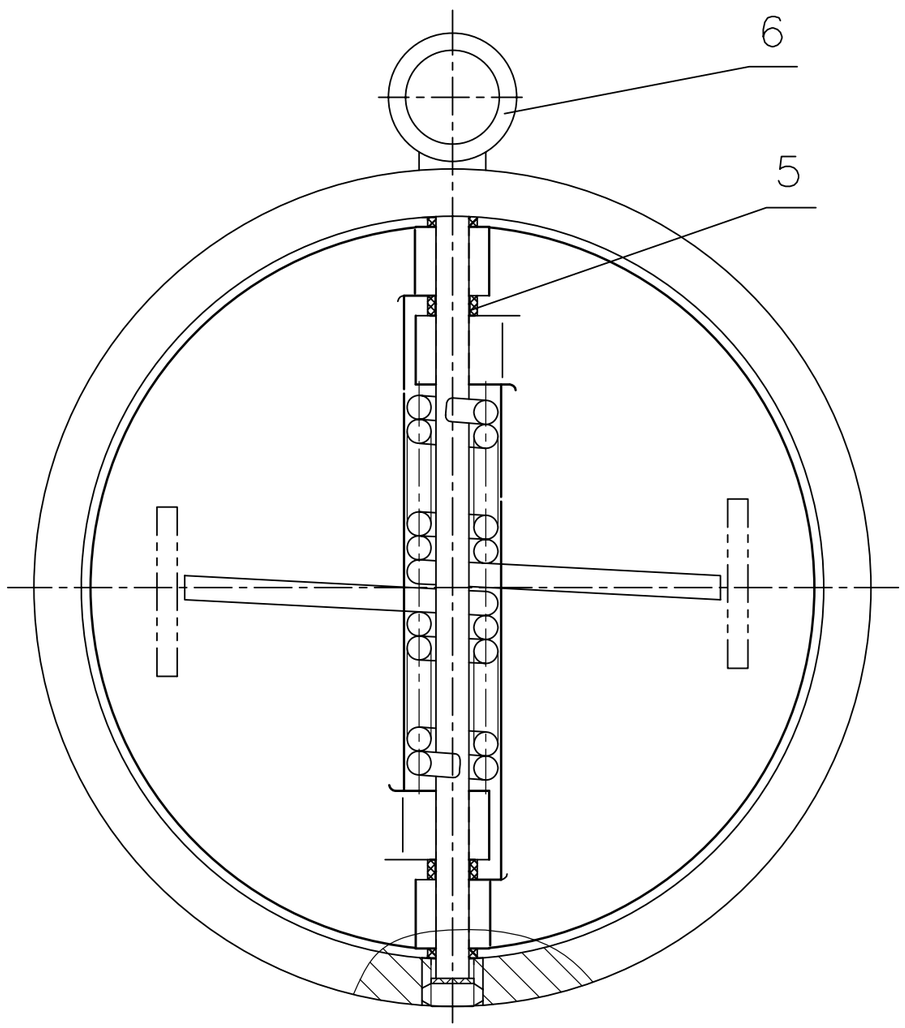

Size		D		D1	D2	L	R	t	Weight kg
mm	inch	DIN PN16	ANSI–125						
50	2"	107	103	65	40	43	29	19	1.53
65	2½"	127	122	80	60	46	36	20	2.44
80	3"	142	132	94	70	64	43	28	3.6
100	4"	162	157	117	88	64	53	27	5.72
125	5"	192	192	145	115	70	66	30	7.34
150	6"	218	218	170	134	76	79	31	9.0
200	8"	273	273	224	182	89	104	33	17.2
250	10"	328	328	265	220	114	127	50	26.3
300	12"	378	385	310	260	114	148	43	42.1
350	14"	438	444	360	298	127	172	45	55.2
400	16"	489	495	410	350	140	197	52	75.3
450	18"	539	544	450	385	152	218	58	101.2
500	20"	594	600	505	438	152	241	58	111.3
600	24"	690	696	624	538	178	295	73	172.0

Num	Code Num	Name	Qty	Material	N.W	G.W	
6		Bail	1	Carbon steel			
5	H77X-10/16-05	Washer	1	F-4			
4	H77X-10/16-04	Spring	2	316			Upon customer requirement
3	H77X-10/16-03	Shaft	2	416/316			
2	H77X-10/16-02	Disc	2	DI/C954/C958			Upon customer requirement
1	H77X-10/16-01	Body	1	CI/DI/WCB			Upon customer requirement

Itemref	Quantity	Title/Name, designation, material, dimension etc	Article No./Reference

Designed by	Checked by	Approved by – date	File name	Date	Scale

ASSEMBLY DRAWING WAFER DUAL CHECK

H77-10/16-00	Edition	Sheet