DN mm	L mm		H mm	W mm	o		c		g		f	T	n-d		Weigh (Kg)	
	F4	F5			1.0	1.6	1.0	1.6	1.0	1.6			1.0	1.6	F4	F5
40	140	240	184	160	150		110		84		3	18	4-19		9	11
50	150	250	195	160	165		125		99		3	19	4-19		11.5	13.5
65	170	270	222	200	185		145		119		3	19	4-19		14	17
80	180	280	251	200	200		160		133		3	19	8-19		18	20
100	190	300	282	200	220		180		154		3	19	8-19		22	25
125	200	325	340	250	250		210		184		3	19	8-19		29	34
150	210	350	379	250	285		240		210		3	19	8-23		38	45
200	230	400	461	320	340		295		265		3	20	8-23	12-23	58	65
250	250	450	559	370	405		350	355	319		3	22	12-23	12-28	90	105
300	270	500	639	370	460		400	410	370		4	24.5	12-23	12-28	120	140
350	290		762	450	520		460	470	429		4	26.5	16-23	16-28		
400	310		836	450	580		515	525	480		4	28	16-28	16-31		
450	330		957	640	640		565	585	548		4	30	20-28	20-31		

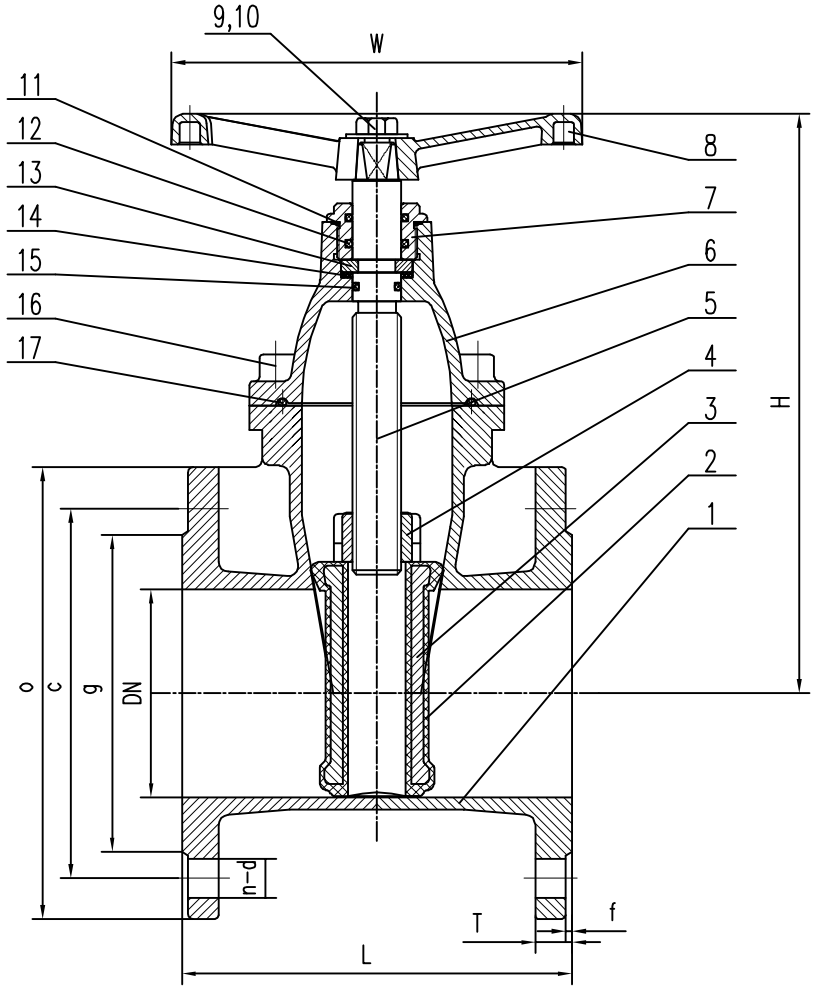

Ttem	Number	Part name	QTY	Material	Remark
17	ZF-100-12	Spacer	1	EPDM/NBR	
16	GB/T70-1985	Hexagon headbolt	4	GB700-88 Q235	
15	ZF-100-14	Bonnet ring	1	EPDM/NBR	
14	ZF-100-13	PTFE pad	1	F-4	
13	ZF-100-11	Clasp	1	HMn58-2-2	
12	ZF-100-10	O-ring	2	EPDM/NBR	
11	ZF-100-9	O-ring	1	EPDM/NBR	
10	GB2587-85	Flat washer	1	1Cr13	
9	GB5780-86	Hexagon headbolt	1	1Cr13	
8	ZF-100-8	Handwheel	1	QT450-10	
7	ZF-100-7	Gland	1	HMn58-2-2	
6	ZF-100-6	Bonnet	1	QT450-10	
5	ZF-100-5	Stem	1	2Cr13	
4	ZF-100-4	Stem nut	1	HMn58-2-2	
3	ZF-100-3	Skeleton	1	QT450-10	
2	ZF-100-2	Disc	1	EPDM/NBR	
1	ZF-100-1	Body	1	QT450-10	

Design		DN40-DN450		DIN 3352 Non-rising stem resilient seated Gate valve
Drawing				
Verifly				
Approue		Total 1 Page	No 1 Page	